FISHMAN *FLUENCE*™

HSH w Standard 5-way Switch
Control Scheme:
Volume
Tone (Pull for Voice-2)

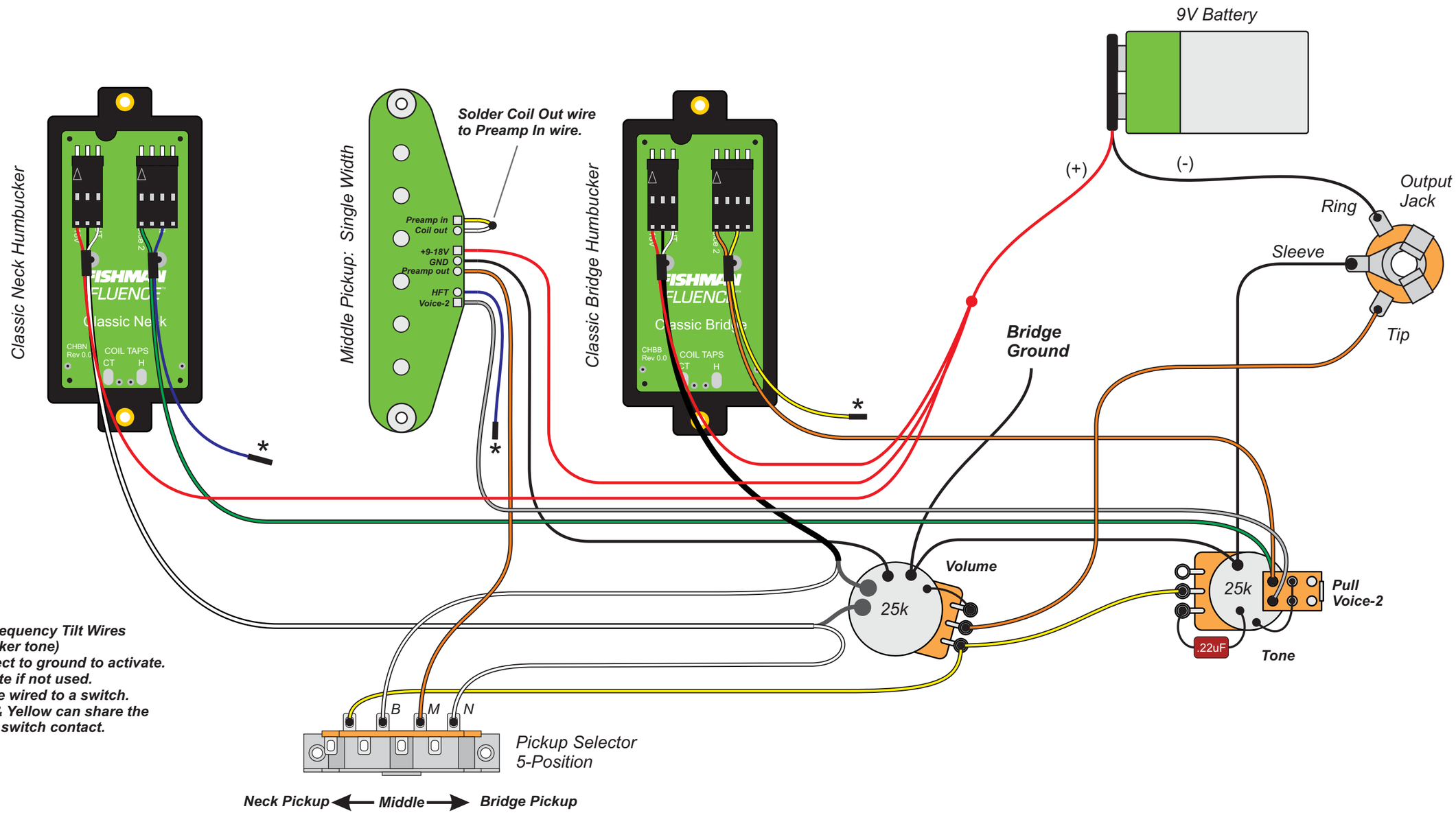

* *High Frequency Tilt Wires (for darker tone)*
- *Connect to ground to activate.*
- *Insulate if not used.*
- *Can be wired to a switch.*
- *Blue & Yellow can share the same switch contact.*