FISHMAN FLUENCE™

Classic Open Core Humbucker Set

HSH Wiring with SSA Single Width Pickup

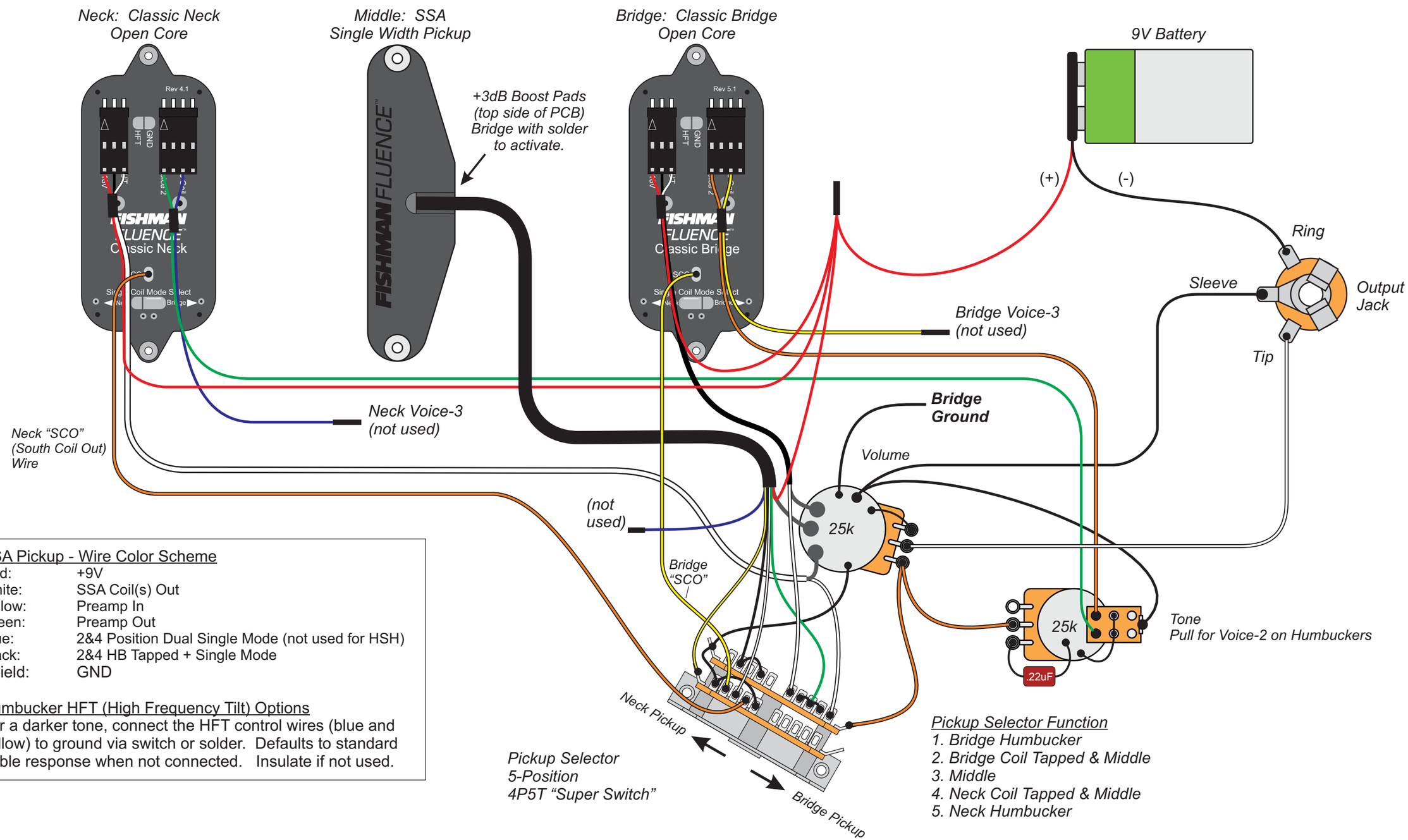

SSA Pickup - Wire Color Scheme

Red:	+9V
White:	SSA Coil(s) Out
Yellow:	Preamp In
Green:	Preamp Out
Blue:	2&4 Position Dual Single Mode (not used for HSH)
Black:	2&4 HB Tapped + Single Mode
Shield:	GND

Humbucker HFT (High Frequency Tilt) Options

For a darker tone, connect the HFT control wires (blue and yellow) to ground via switch or solder. Defaults to standard treble response when not connected. Insulate if not used.