FISHMAN FLUENCE™
Herman Li Humbucker Set

Volume
Tone - Pull for Voice-2 (1,3,& 5 positions)
Schaller Megaswitch-M 5-way Switch

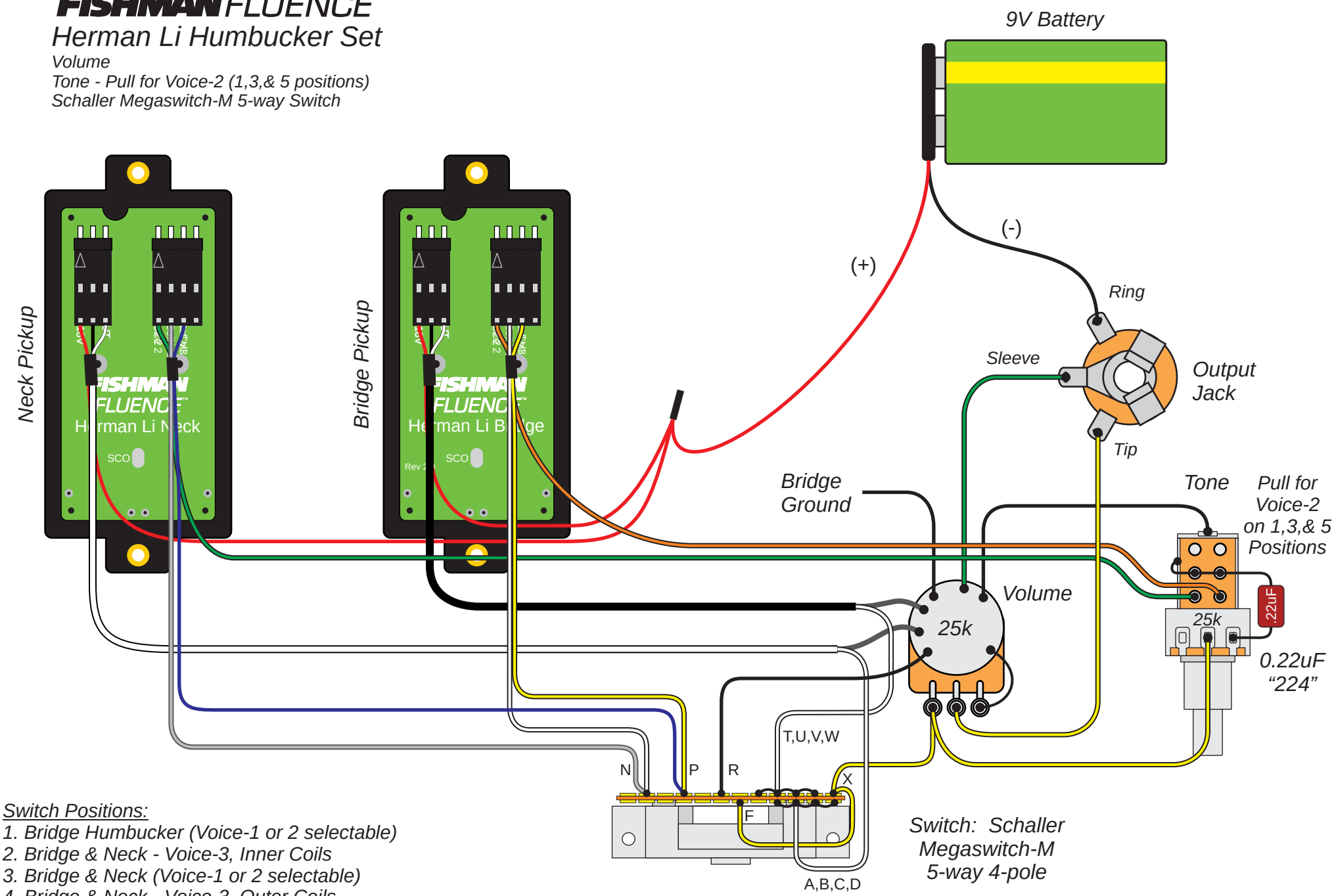

Switch Positions:
1. *Bridge Humbucker (Voice-1 or 2 selectable)*
2. *Bridge & Neck - Voice-3, Inner Coils*
3. *Bridge & Neck (Voice-1 or 2 selectable)*
4. *Bridge & Neck - Voice-3, Outer Coils*
5. *Neck Humbucker (Voice-1 or 2 selectable)*