FISHMAN FLUENCE™

Classic Open Core Pickup Set Rev2 & SSA Single Width - HSH Configuration

1x Volume
1x Tone (pull for humbucker Voice-2)
1x Mini Toggle for HH / HSH mode select

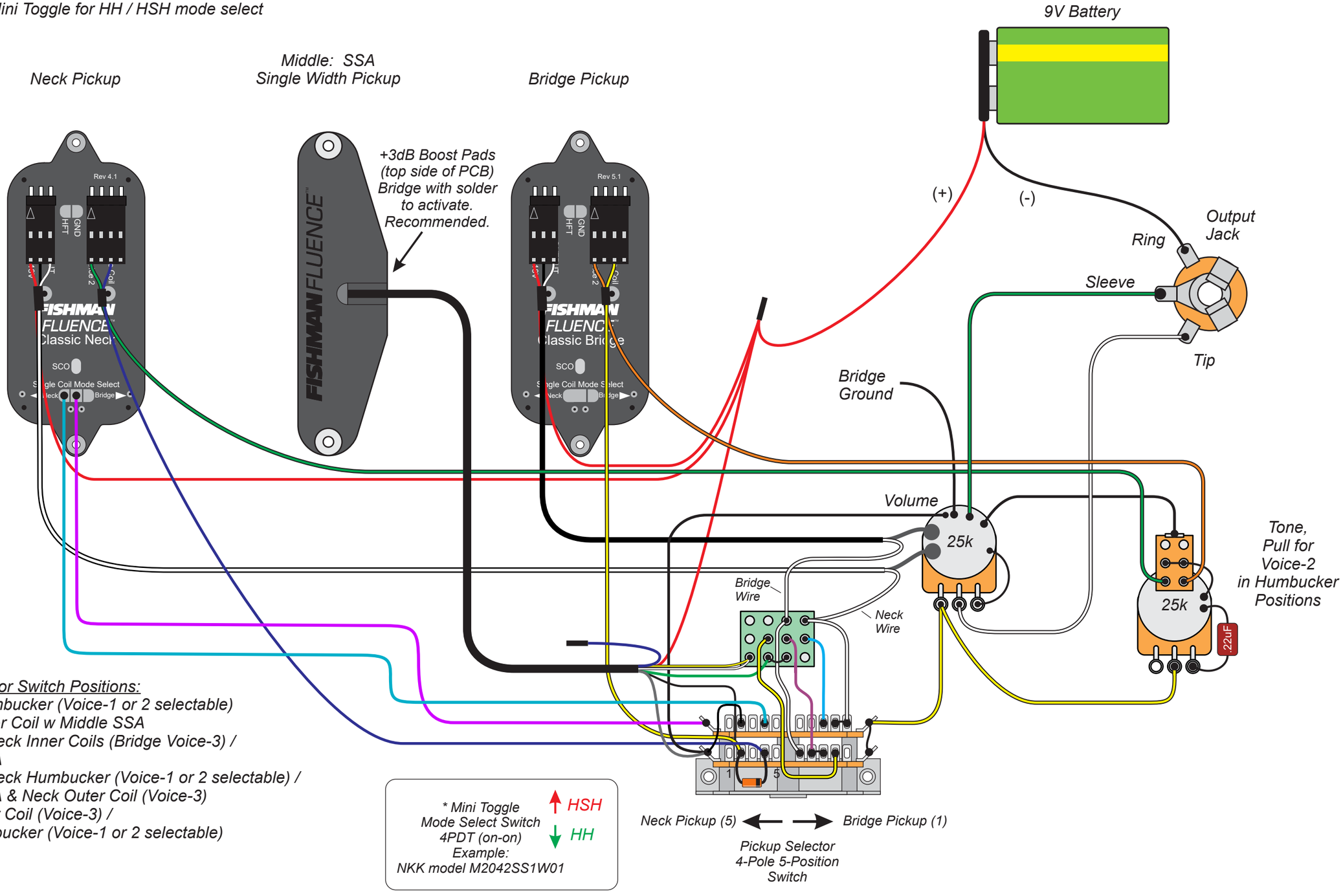

Pickup Selector Switch Positions:

1. *Bridge Humbucker (Voice-1 or 2 selectable)*
2. *Bridge Inner Coil w Middle SSA*
   Bridge & Neck Inner Coils (Bridge Voice-3) /
3. *Middle SSA*
   Bridge & Neck Humbucker (Voice-1 or 2 selectable) /
4. *Middle SSA & Neck Outer Coil (Voice-3)*
   Neck Outer Coil (Voice-3) /
5. *Neck Humbucker (Voice-1 or 2 selectable)*